SIERRA PACIFIC WINDOWS

Clad Urban Casement Operating
36" x 72" Frame Size
Nail Fin Installation / Non-Impact

CCL Listing #429-H-554.14-.17	Intertek Test Report Number: **P4634.01-901-44**

Clad Urban Casement Operating
Nail Fin Installation / WDMA Instructions / Non-Impact

SHEET: 1 OF 2		UPDATED: 7/12/2023	DRAWN BY: B.K.

TEST REPORT SUMMARY:

- SINGLE UNIT, MAXIMUM BASIC UNIT FRAME SIZE: **36"(914mm) x 72"(1829mm)**
- OVERALL DESIGN PRESSURE: **±40.10 psf**
- STRUCTURAL TEST PRESSURE: **±60.15 psf**
- RATING: **LC-PG40**

INSTALLATION NOTES:

1. USE 2" x _ PINE FOR WOOD BUCK
2. PLACE WOOD SHIMS EVERY 6-10"
3. 1/4" MAXIMUM SHIM SPACE AT HEAD, SILL AND EACH JAMB
4. APPLY A CONTINUOUS BEAD OF SEALANT BETWEEN THE NAIL FIN AND THE BUCK AT THE HEAD, SILL AND SIDE JAMBS TO SECURE NAILING FLANGE TO FRAMING MATERIAL
5. INSTALL #8 X 1" PPH GALVANIZED SCREWS SPACED MAXIMUM 4" FROM EACH CORNER AND MAXIMUM 8-10" ON CENTER THEREAFTER, THROUGH THE INTEGRAL NAIL FIN INTO THE FRAMING MATERIAL, AT HEAD, SILL AND SIDE JAMBS, 5/16" MINIMUM EDGE DISTANCE.
   - SILICONE SEAL OVER SCREW HEADS
6. 1" MINIMUM FASTENER EMBEDMENT INTO FRAMING MATERIAL
7. MAXIMUM WINDOW SIZE: B.U.S. (Basic Unit Size) = **36"(914mm) x 72"(1829mm)**
8. THIS INFORMATION DOES NOT APPLY TO MULLED UNITS

GENERAL INSTALLATION NOTES:

- Check rough opening for proper size, plumb, level and square.
- Make all necessary adjustments to ensure rough opening is plumb, level & square.
- Sill must be flat, level and capable of supporting the weight of the unit.
- Opening must allow a maximum of 1/4" shim space at head, sill and jambs.
- Wood buck, framing, fasteners, sealant and all wall system materials are provided by others

FLASHING

- For units that have to meet a specific DP (Design Pressure) rating, any kind of building wrap must be folded and taped away from each rough opening before the unit is installed. Unit must come in contact with the building's bare sheathing. A bead of silicone must be applied to the backside of the nail fin where it meets the unit, at head and jambs.
- Once unit is installed and flashed properly, the building wrap must be reapplied and trimmed flush with the unit's exterior. A bead of sealant must be placed along the seam joint of the building wrap and the unit. Tape the corner cuts in the building wrap.

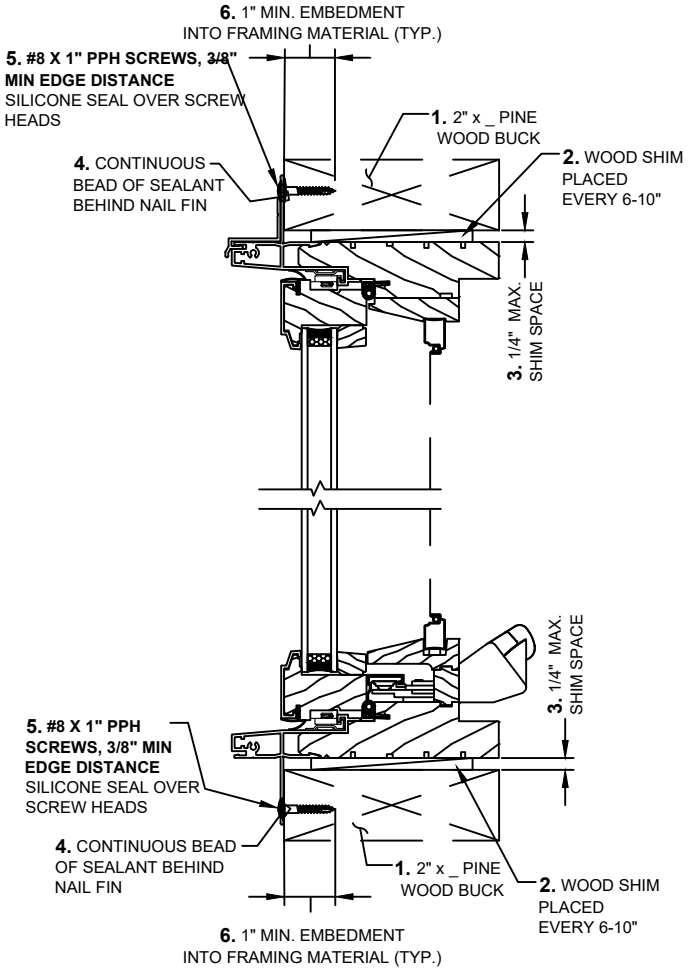

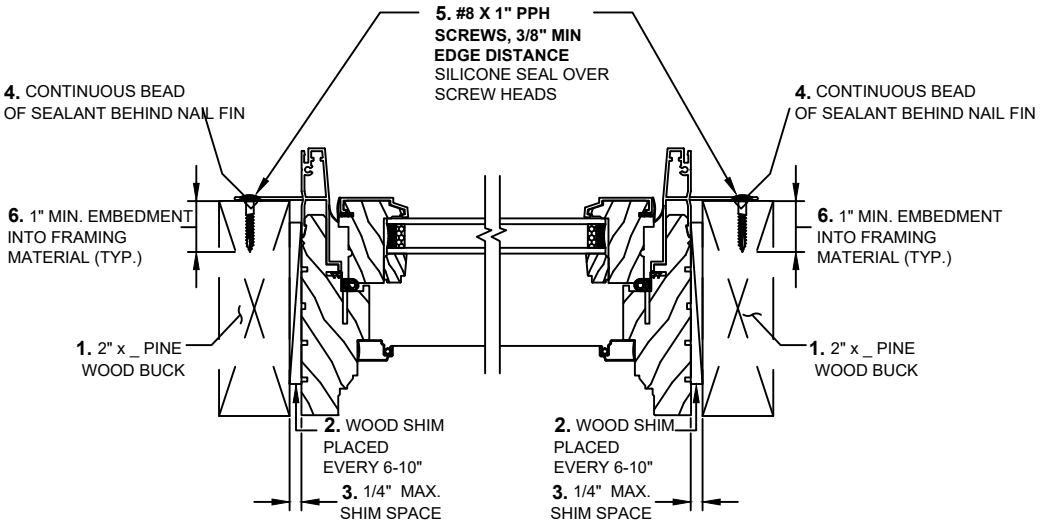

Installation requirements may vary in particular locations and in other types of construction. Proper installation is essential, and Sierra Pacific Windows, recommends consultation with an AAMA Certified Installer, or other qualified, registered building professional before installation of any SPW product. Proper installation of SPW products is the responsibility of the installer. SPW is not responsible for proper installation. SPW is not responsible for the design of, conditions in, or performance of building construction beyond the perimeters of the SPW units. SPW is not responsible for proper integration of the SPW units with the weather-repellent systems of the building.

SIERRA PACIFIC WINDOWS

Clad Urban Casement Operating
36" x 72" Frame Size
Nail Fin Installation / Non-Impact

CCL Listing #429-H-554.14-.17	Intertek Test Report Number: **P4634.01-901-44**

Clad Urban Casement Operating
Nail Fin Installation / WDMA Instructions / Non-Impact

SHEET: 2 OF 2		UPDATED: 7/11/2023	DRAWN BY: B.K.

TEST REPORT SUMMARY:

- SINGLE UNIT, MAXIMUM BASIC UNIT FRAME SIZE: **36"(914mm) x 72"(1829mm)**
- OVERALL DESIGN PRESSURE: **±40.10 psf**
- STRUCTURAL TEST PRESSURE: **±60.15 psf**
- RATING: **LC-PG40**

ELEVATION SHOWING FASTENER LOCATION & SPACING (TYP.)

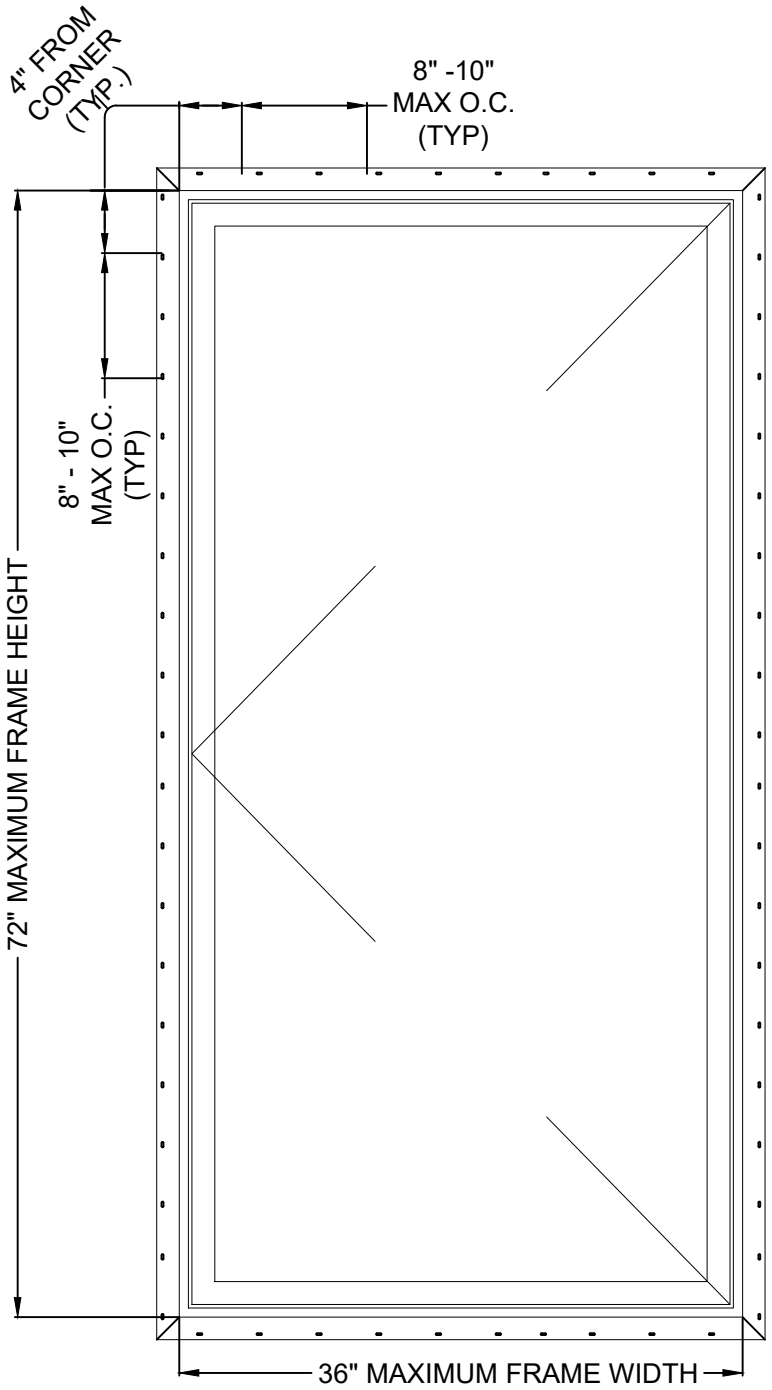

Installation requirements may vary in particular locations and in other types of construction. Proper installation is essential, and Sierra Pacific Windows, recommends consultation with an AAMA Certified Installer, or other qualified, registered building professional before installation of any SPW product. Proper installation of SPW products is the responsibility of the installer. SPW is not responsible for proper installation. SPW is not responsible for the design of, conditions in, or performance of building construction beyond the perimeters of the SPW units. SPW is not responsible for proper integration of the SPW units with the weather-repellent systems of the building.